ISSN : 2321-9416

Indo - American Journal of Mechanical Engineering

www.iajme.org
Email : iajme.editor@gmail.com or editor@iajme.org

Indo-Am. J. of Mech. Engg., 2020
Indo-American Journal of Mechanical Engineering
ISSN 2321–9416www.iajme.org
Vol 09 Issue 3,July 2020

A look into how mechanical design and biological systems may work together

SK.Saidulu, P.Siva

Article Info

Received: 09-04-2020 *Revised: 10 -05-2020* *Accepted: 22-06-2020*

Abstract: The study of biomimicry is expanding rapidly. Using a recently developed system of the field, this article categorizes particular instances of effective technology transfer between biology and engineering into two subcategories: biomimetics by analogy and biomimetics through induction. Both well-known and less common uses are discussed, such as aviation winglets, an improved straw-bale screw, Velcro, self-cleaning surfaces and coatings, and spider studies. General concepts that can be implemented by engineers with little background in biology are discussed, and the need of a shared vocabulary between biologists and engineers is highlighted, making presentations at varying levels of depth more compatible.

Keywords: Biomimicry, Bionics, Emerging Technologies, Biologically Inspired Engineering, and New Technologies

INTRODUCTION

This article's focus is on how biologists and mechanical engineers may work together to advance common methods in biomimetics. To do this, I will discuss the benefits of biomimetic work in the fields of biology and engineering. The area of biomimetics is through a period of transition from an exotic subject dealt with by a small group of experts to a mainstream field valued by both funding agencies and the general public. The growing body of literature on biomimetics (Figure 1) [1] is indicative of this trend. Journal of Mechanical Engineering Science has given biomimetics in engineering the attention it deserves by publishing a special issue on the topic [2]. Mechanical engineers and technicians who are unfamiliar with biomimetics can benefit from reading the 10 papers in that special issue, and seasoned biomimetists will learn something new.

1 Due to the increased specialization in today's scientific and technological fields, it is essential that different fields communicate with one another to avoid repeating the same mistakes. Both biologists and engineers may benefit greatly from borrowing ideas and methods from one another. However, there is still a gap between the linguistic and cultural norms of the biological and engineering communities, which often has its roots in early schooling. The essay provides compelling arguments for bridging the gap between the disciplines of biology and engineering, and describes the mutual advantages of doing so.

2 Here is the article's main argument: The incentives for working in biomimetics are laid out along a recently established framework for the discipline. Products and applications ranging from the well-known to the very niche are utilized to showcase this framework.

4 1Institut für Allgemeine Physik, Vienna University of Technology, Wiedner Hauptstraße, Wien, Austria 2AC2T research GmbH, Austrian Centre of Competence for Tribology, Viktor Kaplan-Straße, Wiener Neustadt, Austria 3Department of Theoretical Biology, University of Vienna, Althanstraße, Vienna, Austria 4Department of Neurobiology and Cognition Research, University of Vienna, Althanstraße, Vienna, Austria

MOTIVATION FOR A DIALOGUE

Neither biologists nor engineers tend to recognize many parallels between their respective fields. The study of structure and function provides a crucial foundation for engineering.

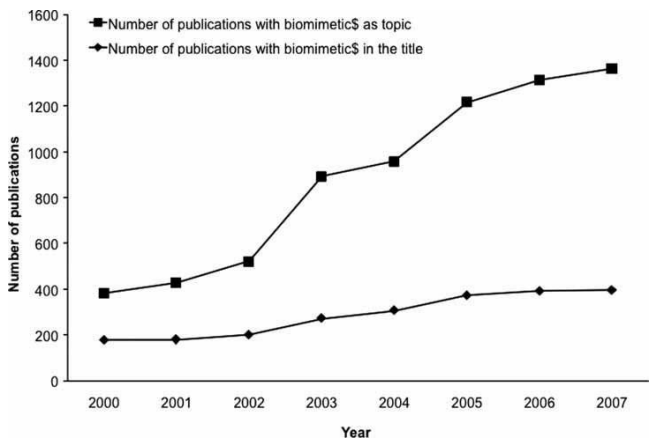

Fig. 1 Numberof worldwide scientific publications con-taining the term biomimetic$ (i.e. biomimetic, biomimetics, biomimetical, etc.) within article topic or title. Source: ISI web of knowledge

material properties and how that information may be used to make technologies more efficient (i.e., less heavy, quicker, and cheaper). In addition, sound engineering necessitates adjusting and managing the qualities of the components. Giant jumps in engineering need groundbreaking advances in technology, as well as completely new concepts and unique techniques. Biologists tend to care less about practical implications. They are on a mission to learn the fundamentals of how living things work.

Nonetheless, both focus on building and progress. And here is where the two fields intersect: mechanical engineers may learn from biologists and use their insights to improve efficiency and create new products, while biologists who approach their work with an engineer's perspective can gain new insights into the workings of the living world. Successful biomimetic products like Velcro, winglets on aircraft, and self-cleaning surfaces and paints are all examples of the fruitful cross-fertilization that may occur across different fields of study.

Vogel [3] provides a solid introduction to the mechanistic fields of biology and engineering. Applied Bionics and Biomechanics, International Journal of Design and Nature, Journal of Bion- ics Engineering, and Journal of Bioinspiration and Biomimetics are just few of the scholarly publications that focus on the topic. Several schools currently offer courses in biomimetics, and several have established dedicated research centers to further the topic (for example, the 'Centre for Biomimetic and Natural Technolo- gies' at the University of Bath in the UK; see http://www.biomimetics.org.uk/). The University of Reading in the United Kingdom is home to BIONIS, the Biomimetics Network for Industrial Sustainabil- ity, which was founded in the spring of 2002 with funding from the UK Engineering and Physical Sciences Research Council (http://www.extra.rdg.ac.uk/eng/BIONIS/).

The Bionics Competence Network (BIOKON, /bikn/) was established in 2001 at the University of Bonn in Germany. It is made up of 28 of Germany's top experts in bionics and biomimetics. BIOKON's mission is to showcase the benefits of biomimetics to corporate and industrial sectors, the scientific community, and the general public. The Vienna University of Technology in Austria initiated a biomimetics/bionics collaboration network in the middle of 2008. The folks behind this piece really kicked things off. To encourage the creation of a new generation of space systems, the European Space Agency initiated a project to "develop a co-operation platform between space and biomimicry experts that will enable to bridge current gaps that exist for an effective application of natural mechanisms and phenom- ena in space system design"

Biomimicry as a source of inspiration for engineers.

2.1.1 To put it another way, biomimetics is the practice of adapting biological processes and structures, as well as developing natural principles, for use in technology. It's important to remember that with biomimetics, it's not possible to create exact replicas of natural phenomena in the lab. Rather, biomimetics comprises a creative conversion into technology that is typically built on several levels of abstractions and modifi- cations, i.e.

ISSN 2321–9416www.iajme.org
Vol 09 Issue 3,July 2020

an independent sequential construction that is more of a 'new creation' than a blueprint of nature [4]. There is currently no agreed-upon system for separating biomimetics into its component disciplines. Nachtigall's [5] research suggests that biomimicry may be broken down into three distinct subfields: "building biomimetics," "process biomimetics," and "information biomimetics."

2.1.2 Biomimetics has been around since at least the renaissance-era flying devices designed by Leonardo da Vinci. In the middle of the twentieth century, O.H. Schmitt introduced the concept of biomimetics. Around the same time, J.E. Steele first used the term "bionics" to describe a technology that merged biological and electrical components. 'Bionik' (a combination of biology and technology) is the word used in German-speaking countries.

2.1.3 A new classification of biomimetics domains is presented, differentiating between biomimetics by analogy and biomimetics by induction, based on the research of Nachtigall [5], Speck et al. [6], and Milwich et al. [7]. Biomimetics via analogy is a method of solving engineering challenges by drawing inspiration from the findings of the biological sciences. Biomimetics through induc- tion is the process of creating technological implementations based on broad principles discovered via studying biology. The timelines and potential outcomes of the two strategies are distinct.

2.1.4 Biomimetics by analogy

The methodology of biomimetics by analogy startswith the clear definition of the problem stemming from engineering. In the next step, analogous prob-lems are sought in nature. This works by asking thequestion ‘where in the living world do similar prob- lems appear?’. The examples in nature are then anal- ysed, and the specific findings are applied in the search of solutions to the engineering problem (Fig. 2). An example for successful biomimetics by analogy is the utilization of winglets in airplanes. Winglets minimizedrag and are inspired by the wing tips of certain birds.The advantages of this method are quick and effective solutions to the engineering problems. This directed method inherently provides a manageable
number of examples from nature.

2.1.5 Biomimetics by induction

The basis for biomimetics by induction is funda- mental biological research. Initially there is no aim towards specific applications. This method is inher- ently undirected. Abstracted from the biological realm

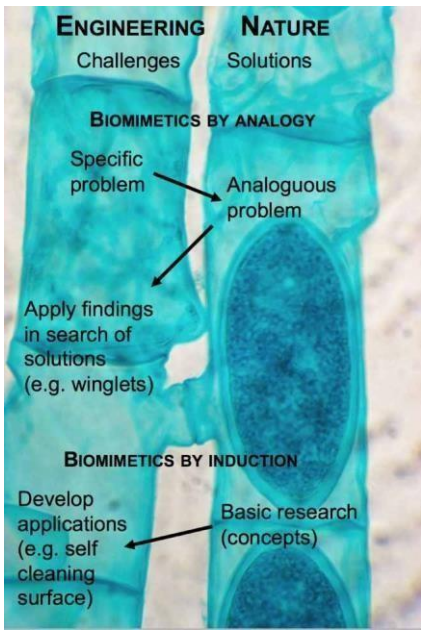

Fig. 2 Biomimetics by analogy and biomimetics by induction are two alternative study methods that provide engineers alternate motivations for tackling biological problems. The exchange of data is essential in both circumstances. Conjugation in Spirogyra, a genus of filamentous green algae, serves as a background picture. In this case, the 'fruitful exchange' occurs when two previously separate cells join forces. Featured image courtesy of Dr. David Pol- cyn

of San Bernardino State University. The principle underlying a phenomena is revealed and then defined via translation into general language. Then, after consulting with engineers and designers, potential technology applications are explored and created (Fig. 2). The lotus effect [8] is a widely used example of biomimetics through induction that has been used into a variety of products (paints, coatings, textiles, roof tiles, etc.) and has helped to improve the field's reputation

Motivations for biologists: technical biology

Technical biology deals among other issues withthe investigation of the correlation of form, struc- ture, and function in living organisms using methodsfrom physics and engineering, i.e. there is a transfer(of methods) from technology to biology. The term technical biology was popularized by Nachtigall to complement biomimetics.

The advantage of this method is that it can con- tribute to an understanding of basic principles. Addi- tionally, in finding out how biological systems func- tion, the technical biology approach can also yield biomimetic applications, which would then corre- spond to biomimetics by induction. An example for technical biology is the work by Barth [**9**] on spider mechanosensors, which is partly inspired by strain gauges.

3 EXAMPLES

3.1 Aircraft winglets as an example of biomimicry

3.2 4.2 Engineers began looking for answers to the biologically comparable issue after encountering the special challenge of huge turbulences caused by aircraft wingtips. Bird wingtips, with their rich morphological diversity, are an interesting biological case study. Airplane builders were particularly interested in the wings of large gliders like storks. These birds' wingtip feathers are structured to break up the huge vortex into multiple smaller ones, reducing the lift-induced drag generated by wingtip vortices. Many modern passenger aircraft have wingtip devices called winglets. Spiroids (split wing loops) are a technological advancement that builds on the success of winglets by abstracting the underlying idea. Looping back onto the wing, spiroids are a kind of winglet designed to reduce or eliminate tip-induced vortices [10]. They save a lot on gas money.

3.3 Other technologically intriguing aspects of bird wings being studied as well, including the shape's adaptability to flying speed and lift improvement through self-actuating flaps. Self-activating, biomimetic flaps on a motor

3.4 Stemme S10 gliders have been shown to increase flying performance and decrease stall speed [11].

3.5 Biomimetics by analogy: bioinspired straw bale screw

Trees feature load-adaptive growth and maintain a uniform stress distribution at their surface. They grow in a way that the surface stresses, which arise from gravity and external sources (e.g. wind and snow), are kept constant. Therefore, the branching of trees has a characteristic shape. Changes such as cutting of large branches of the tree or tilt of the tree caused by hang-sliding induce morphological alterations by further growth according to the principle of mini- mizing surface stress peaks and result in regaining uniform surface stresses. Mattheck [**12**] has investi- gated shape optimization and fracture behaviour in trees for many years and introduced – based on his findings – a method to optimize workpieces.

A biomimetically optimized screw for mounting façades and other items to straw-bale buildings was developed by applying this method [**13**]. In this screw, the amount of material used is minimized and the toughness is increased in certain relevant cases of load by morethanathirdincomparisontoanon-optimized geometry (Fig. 3). As opposed to conventional design principles (such as using simple arcs of a circle in tran- sitions), this method allows for close to constant stress on the surface of the workpiece. The design princi- ple based on the growth of trees was also applied to optimize an orthopaedic screw. The biomimetically optimized screw endured at least 20 times more stress cycles than a conventional orthopaedic screw, with- out showing cracks at the end of the test [**12**]. This drastically reduces the risk of an implant to rupture.

ISSN 2321–9416www.iajme.org
Vol 09 Issue 3,July 2020

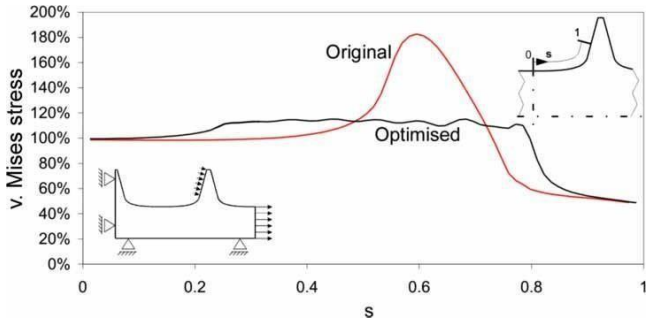

Fig. 3 Biomimetically optimized straw bale screw: The diagram shows the von Mises stress before and after optimization of the radius in the thread. The stress is reduced by more than one-third com- pared to a conventional radius for the case of load shown in the inset. Diagram andinset reproduced from reference [**13**] with permission ©Springer 2006

3.6 Biomimetics by induction: Velcro

Various plants utilize animals and people to disperse their fruits by transporting them in clothes, feathers,or furs. The Swiss engineer G. de Mestral investi- gated the fruits of a burdock using an optical micro- scope and discovered why they clung on so ardently: the fruits were covered by hundreds of tiny flexiblebut strong hooks and were thus able to reversibly attach themselves to textile and hairy structures. (see www.velcro.com).

Mestral realized the potential of this discovery anddeveloped it into an idea that, with much time and effort, would become a revolutionary application: a hook and loop fastening system whose simplicity and strength superseded all previous systems. The patentwas filed in 1951 (Swiss patent no. 295638). The brandname Velcro was created from the first syllables of theFrench words *vel*ours (loop) and *cro*chet (hook).

Mestral proposed several different reversible attach-ment systems in his patent application (Fig. 4). The attachment system as presented at the very bottomof Fig. 4 closely resembles a type of dragonfly head- arresting system, as reported by Gorb [**14**] in 1999. Thisdesign is currently being tested for use in low-wear reversible attachment devices.

3.7 Biomimetics by induction: self-cleaningsurfaces and paints

The lotus plant has always been popular for its cleanleaves. It is sacred for Buddhists because in their belief, impurities and sorrows roll off its leaves and therebyyield annihilation of suffering. Also, other plants such as cauliflower, cabbage, tulips, and bananas show self-cleaning effects.

Basic biological research showed that the key for understanding this phenomenon lies in the microstructure of the leaf surface: it is not smooth, but covered with microstructured wax [**8**]. This struc- ture increases the contact angle of water droplets onthe surface and causes them to roll off easily, tak- ing surface debris with them. The microstructured wax is also the reason for the small contact area of debris with the surface, facilitating self-cleaning prop-erties (Fig. 5). This principle has been used to develop technical surfaces with similar properties.

In 1997, W. Barthlott filed the US patent called ‘Self-cleaning surfaces of objects and process for pro- ducing same’ (US patent no. 6660363) and initiated worldwide activities on the production of self-cleaning surfaces and paints, leading to the development of a plenitude of applications. According to W. Cyrol from the Sto company, self-cleaning *Lotusan* paint for 40 million squaremetres was sold by the endof 2006.

ISSN 2321–9416www.iajme.org
Vol 09 Issue 3,July 2020

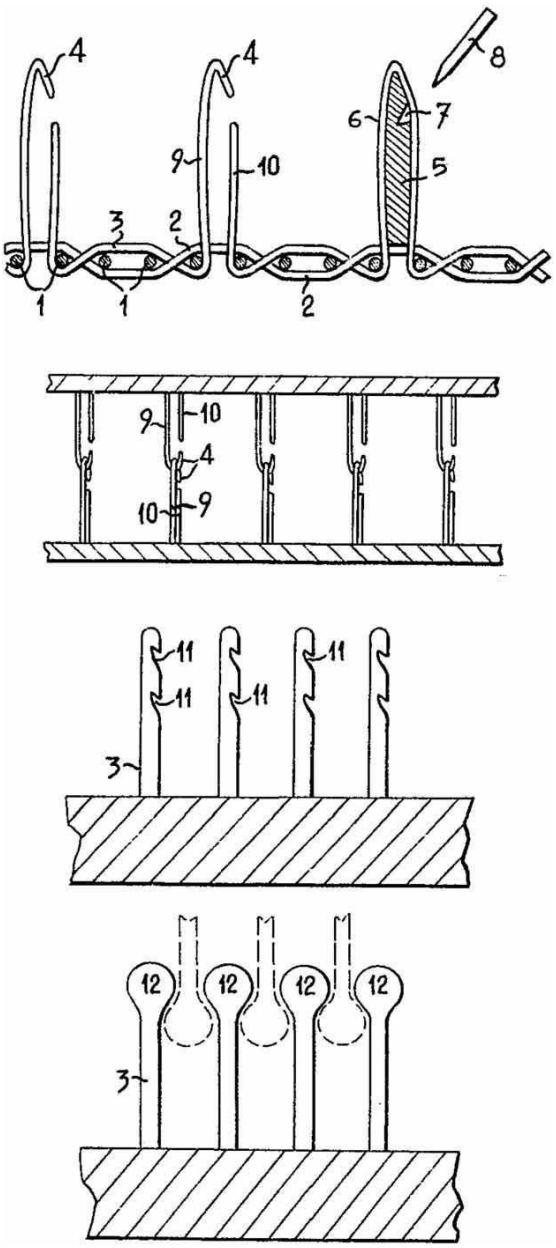

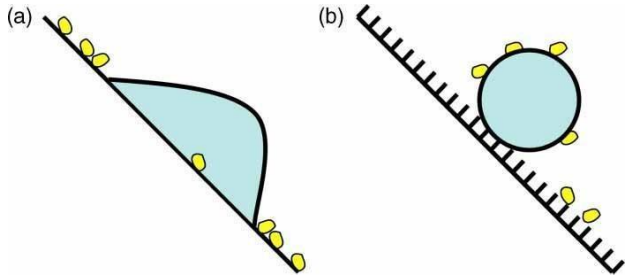

Fig. 4 Drawings from the 1951 patent application fora 'Velvet type fabric and method of produc-ing same' showing different possibilities for reversible attachment systems. Source: http://v3. espacenet.com/origdoc?DB=EPODOC&IDX= CH295638&F=0&QPN=CH295638

3.8 Scientific Research Into Spiders Single photon detectors [15] and mechanore- ceptors with sub-nanometre sensitivity [16] are only two examples of the very sensitive sensors that organisms have evolved. The technical role of such refined sensing has to be clarified. Barth and co-workers are a great illustration of how engineers and biologists can work together to study a topic; they have been studying the spider mechanoreceptive systems for decades. Fig. 5 Schematic showing (a) how a liquid droplet rolling over dirt on a traditional flat surface does little more than redistribute the particles and (b) how, on a self-cleaning surface, the dirt particles have a small contact area with the surface, causing the droplet to roll over the surface with the particles adhering to it as it rolls. review (for the source, see [9]). In order to comprehend biological processes, they use techniques often used in technology. Spiders are equipped with sensors across their exterior chitin skeleton. They rely heavily on various forms of mechanoreception to make sense of the environment around them. About 400 million years of evolution went into developing their sophisticated sensory systems.

Legs' slit sensilla organs are like little strain gages. Tiny skeletal slits, when stretched by tens of nanometers, trigger nerve impulses. This allows the spider legs to pick up longitudinal vibrations traveling through the web on the radial threads. The direction of a source may be determined by measuring the variations in the amplitude of incoming vibrations across the legs. 'Hairs' with a medium flow rate are called trichobothria. They detect even the tiniest changes in air pressure, such as those caused by a passing prey, and react accordingly. At the cutting edge, the effort required to pull one hair over another2.5 x 1020 J every oscillation cycle [9]. The vast majority of a spider's hairs are tactile hairs. Their job is to detect touch. Tactile hairs are a non-linear sensor because their bending moment saturates at about 4 x 109 Nm, growing more slowly with greater load than with smaller loads. This prevents the hair from tangling and breaking and increases its volume. The measuring range is increased in comparison to a stiff hair, and it is more sensitive to weak impulses than strong ones. Spiders' legs aren't extended by a network of muscles and bones, but rather a little hydraulic system. Space robotics and clothing [18] might benefit from a biomimetic application motivated by the technological biology research of Blickhan and Barth [17] on pressure in the exoskele- ton of spiders.

4 CONCLUSION

Most current biomimicry uses involve building things. Examples of construction biomimetics include the use of natural biotribological systems as the basis for innovative micro and nanotechnological devices (for overview, see reference [19]). Bioinspired micro and nanostructured surfaces are another example of a construction that is now in high demand. Drag-reducing technological surfaces (inspired by shark skin) and structured surfaces (based on the incredible architecture that enables the Gecko to attach to walls) are already on the road to mass manufacturing [20]. Biological processes like photosynthesis and signal transduction are now being studied as possible new areas for process engineering innovation. The formation of a millimeter-thick liquid layer near a surface and the electro-osmotic flow contribute to adhesion decrease in earthworms [21], a process that is similarly connected to surface parameters. Rechenberg [22] was an early adopter of evolutionary techniques in engineering, beginning in the 1960s and 1970s. Refer to [23] for a thorough overview. Information biomimetics includes evolutionary methodologies for modeling biological processes as development, evolution, and information transmission. Information biomimetics may also use well-established computational methods like neural networks and genetic algorithms. The aforementioned instances are the fruit of concentrated efforts by teams of biologists and engineers. As seen by these instances, interdisciplinary work is essential for successful cooperation. However, because to the vast amounts of information available in many sectors, it is presently impossible for a single individual to master more than a tiny portion of it. However, interdisciplinary work relies heavily on the recognition and comprehension of disparate methods and ideas. It would be ideal if biologists and engineers had a common language in which explanations at varying levels of depth could work together. One possible first step toward this objective is to increase the number of people educated in both engineering and biology. General concepts that may be implemented by engineers with no background in biology have been distilled [5] in addition to particular instances of the creation of successful biomimetic devices and applications. These fundamentals include a focus on efficiency and trial-and-error development rather than predetermined plans, as well as an emphasis on optimizing the whole rather than maximizing a single component feature. The systematic transfer of biological technologies to engineering is therefore made available to a wider audience.

REFERENCES

1 Technology tra- jectories, innovation, and the development of biomimetics. 1 Bonser, R. H. C., and Vincent, J. F. V. IMechE Proceedings, Section C: Journal of Mechanical Engineering Science, 221(C10), 1177–1180.

2 2 Neville, A. Engineering with a Biological Influence: A Special Issue. i, 1141-1230 in 2007's Proc. IMechE, Part C: J. Mechanical Engineering Science, 221(C10).

3 3 Vogel, S. (1998). Cats' paws and catapults: mechanical worlds of nature and mankind. W.W. Norton & Company, New York.

4 The second edition of W. Nachtigall's Bionik: Fundamentals and Case Studies for Engineers and Natural Scientists was published in 2002 by Springer in Berlin.

5 5 Nachtigall, W. Vorbild Natur: Bionik-Design for Functionally Designed Forms (Springer, Berlin, 1997).

6 Speck, O., T. Speck, D. Harder, M. Milwich, and T. Stegmaier. The unavoidable wellspring of new ideas. Retrieved from "Technis- che Textilien," 2006, Deutscher Fachverlag, Frankfurt, Germany, pages 83-101 (Ed. P. Knecht).

7 7 Speck, T.; Speck, O.; Stegmaier, T.; Planck, H.; and Milwich, M. Biomimicry and technological textiles: learning from Nature to create practical engineering solutions. Journal of American Botany, 2006, 93(10):1455-1465.

8 8 The purity of the holy lotus: an escape from pollution in biological surfaces. Barthlott, W., and Neinhuis, C. Planta, 202 (1997), 1-8.

9 Spider senses: technological excellence and biology. 9 Barth, F. G. 105(4):271-285 (Zoology, 2002).

10 Flow structure created when two co-rotating wing-tip vortices meet and merge. 10 Devenport, W. J., Vogel, C. M., and Zsoldos, J. S. Journal of Fluid Mechanics, 394:357-377 (1999).

11 11 Meyer, R., Hage, W., and Bechert, D. W. Flaps on birds' and planes' wings that can deploy themselves. 2006 (Wit Press, Southampton): pp. 435–446 in Flow phenomena in nature: inspiration, learning, and applications 2 (design and nature) (Ed. R. Liebe).

12 12 Design in nature: what we can learn from trees.

Springer-Verlag Berlin Heidelberg, 1998.

13 13 Drack, Martin; Wimmer, Robert; and Hohensinner, Heinrich. The treeplast screw is a mechanism used to secure a wide variety of objects to the surface of a straw bale building. 2006, 4(1-4), 33-41 (doi:10.1007/s10970-006-0001-z) Journal of Sustainable Product Design.

14 14 Dragonfly head restraints: an evolutionary perspective. Gorb, S. N. 1999, 266(1418):525-535 in Proc. R. Soc. Lond. B.

15 15 Single photon signals and transduction in the insect eye. Lillywhite, P. G. 1977;122(2):189-200 in Journal of Comparative Physiology A: Neuroethology, Sensory Neuroscience, and Behavioral Physiology.

16 The mechanical properties of the ciliary bundles of turtle cochlear hair cells. 16 Crawford, A. C., and Fettiplace, R. 1985;364:359-379 Journal of Physiology (London).

17 17 Spider strains in the exoskeleton. R. Blickhan & F. G. Barth. The article may be found in J. Comparative Physiol.

18 18 C. Menon and C. Lira. Inspiration for future space uses from the spider's hydraulic mechanism leads to active articulation. Bioinsp. Biomim., 1, 52-61 (2006).

19 19 New technologies are motivated by biotribology. Gebeshuber, I. C. Nano Today, 2(5):30–37, 2007.

20 20 Mass manufacture of bio-inspired structured surfaces. Abbott, S. J., & Gaskell, P. H. IMechE Proceedings, Section C:

21 2007;221(C10):1181-1191 in Journal of Mechanical Engineering Science.

22 21 Using a biomimetic technique, Yan et al. (2019) simulate the flow of a microthin liquid layer near the surface of an earthworm using electro-osmotic forces. J. Mechan. Eng. Sci., 221(C10):1201-1210 (2007), Proceedings of the Institution of Mechanical Engineers, Part C.

23 22 Frommann- Holzboog, Stuttgart, 1994: Rechenberg, I., Evolutionsstrategie '94: Werkstatt Bionik und Evolutionstechnik, Volume 1.

24 23 Strategies for evolutionary adaptation, by H.-G. Beyer and H.-P. Schwefel. Nat. Comput., 1(1), pp. 53-85, 2002.